Kinghelm®

Model：KH-9752-6P6C

REVISION RECORD				
REV	ECO	DESCRIPTION	DRFT	CHKD

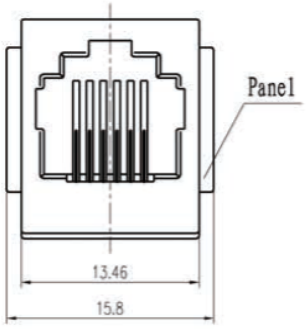

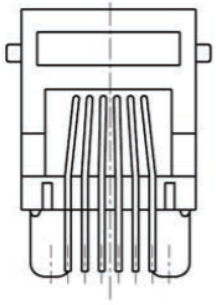

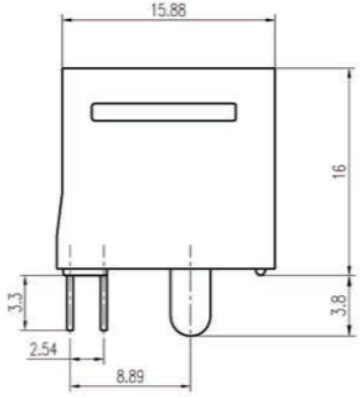

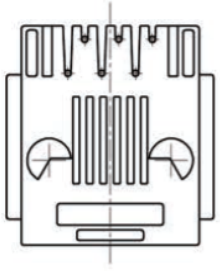

PCB LAYOUT

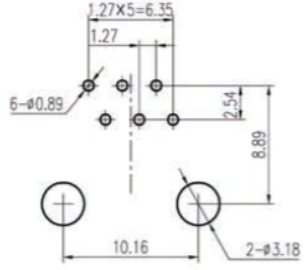

NOTES:

ELECTRICAL:

1. VOLTAGE RATING :125 VAC RMS.
2. CURRENT RATING :1.5 AMP.
3. CONTACT RESISTANCE :30 MILLIOHMS MAX.
4. INSULATION RESISTANCE :500 MEGOHMS MIN @ 500V DC .
5. DIELECTRIC STRENGTH :1000V AC RMS 50Hz. 1MIN.

MECHANICAL:

1. HOUSING MATERIAL :GLASS FILLED POLYESTER UL94V-0.
2. CONTACT MATERIAL :PHOSPHOR BRONZE Ø0.46mm.
3. PLATING :GOLD PLATING OVER NICKEL.
4. OPERATING :750 CYCLES MIN.
5. PCB RETENTION PRE-SOLDER :1 LB MIN.

ENVIRONMENTAL:

1. Temperature Range : -45℃~+85℃
2. Relative Humidity : 90~95% (40±2℃)

PART NUMBER:

DY 154 - □ - □ - □ - □

- □3u" □6u" □15u" □30u" □50u" □PD20u
- □L(L Peg) □S(Split Peg)
- □W(With Panel) □W/O(Without Panel)
- □6P2C □6P4C 6P6C
- Part No.

DETACHED LISTS	mm (inch)	DFTO:	DATE:	SHENZHEN KINGHELM ELECTRONIC CO., LTD.
		CHKD:	DATE:	
	Tolerance Exept as Noted	MFO:	DATE:	WWW.BDS666.COM
	mm 0±0.2 ± 00±0.15 ± 000±0.075 ±	APPVL:	DATE:	Model：KH-9752-6P6C
		MATERIAL:		0755-83044319
	ANGLES ± 0.5	Q`TY:		DRAWING NO. / PART NO. — SIZE A4 — REV 06/05/02 0
		FINISH:		
		SCALE: 2:1		DO NOT SCALE DRAWING — SHEET OF