Kinghelm®

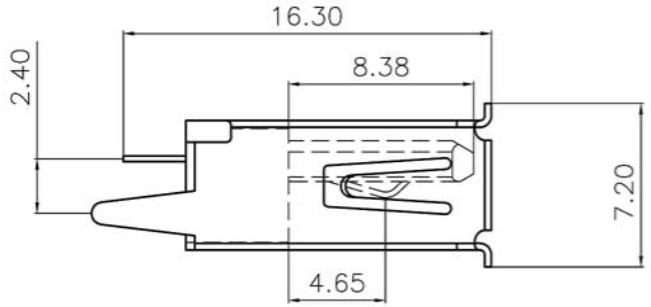

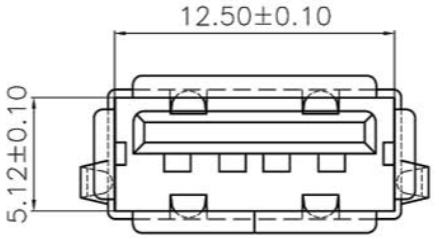

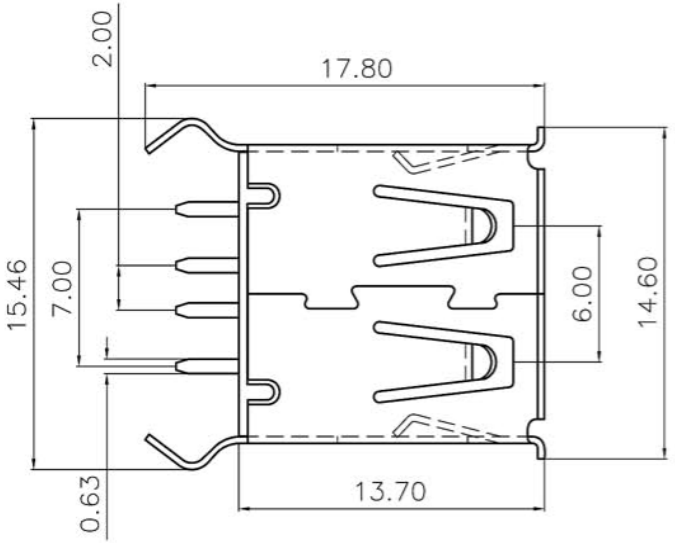

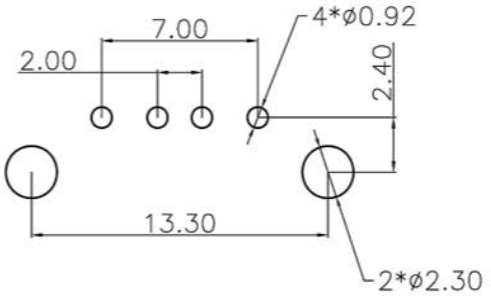

PCB.LAYOUT

Remark

Electrical Specifications:

Contact Resistance:

30 mΩ (Max))

Insulation Impedance:

1000 KΩ (Min)

Withstanding Voltage:

500V AC 1minute

Materials:

Rubber Core:

PBT

Terminal:

Brass C2680

Housing:

Brass C2680/SPCC

Electroplating:

Terminal:

Contact area gold-plating 1 μ",

Soldering area Tin flash 100-200μ"

Housing:

Whole-area copper backing 40-60μ",

Whole-area nickel plating 60-70μ"

91-US01-XXX

- 193;PBT Black, Semi-gold-plated Terminal 1u ", Copper housing
- 194:PBT White, Semi-gold-plated Terminal 1u ", Copper housing
- 195:PBT White, Semi-gold-plated Terminal 1u ", Iron housing
- 196:PBT Black, Semi-gold-plated Terminal 1u ", Iron housing

ITEM:	REVISION	REV BY	APPROVED	DATE	MATL:	SEE SPECIFICATION			APPROVED	
B	Update part No.			2011. 01. 20	PROJECTION:	THIRD ANGLE PROJECTION			CHECKED	
					UNIT:	SCALE	REV(NO)	SHEET	DRAWED	ZhongWei
					mm	1:1	B	1 OF 1	DATE	2011. 01. 20

TOLERANCE UNLESS OTHERWISE SPECIFIED
.XXX ±0.10
.XX ±0.25
.X ±0.30
.X° ±3°

PART NAME:	AF 180 ° Dip terminal bending 13.7	
Part No.	SEE TABLE	C
SHENZHEN KINGHELM ELECTRONIC CO., LTD.	WWW.BDS666.COM	
KH-AF180WJ-13.7-JB	0755-83044319	