Kinghelm®

TOLERANCE UNLESS OTHERWISE SPEC(未注容差尺寸公差)	
BASIC DIMENSIONS	±0.3
UP TO 10	±0.2
ABOVE 10 TO 100	±0.2
ABOVE 100	±0.2
ANGULAR DIMENSIONS	±3°

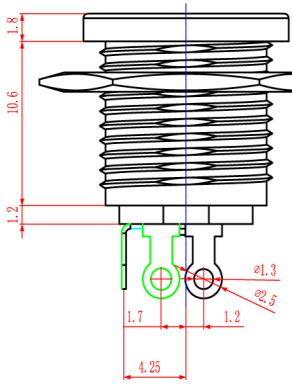

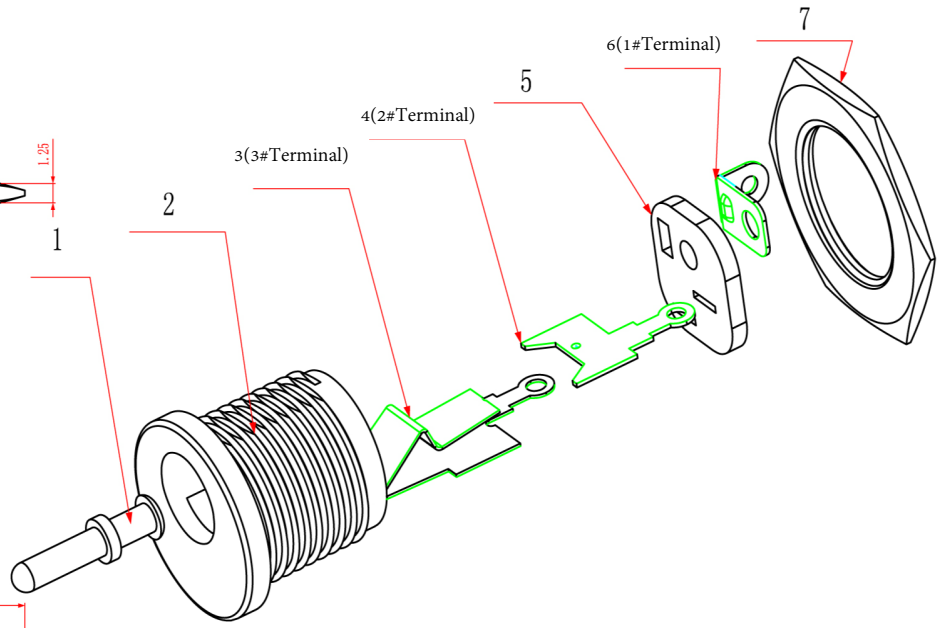

SCHEMATIC

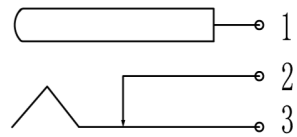

PCB LAYOUT

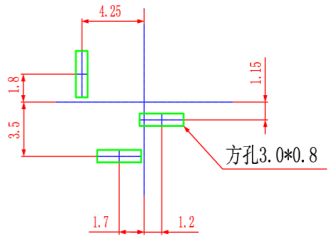

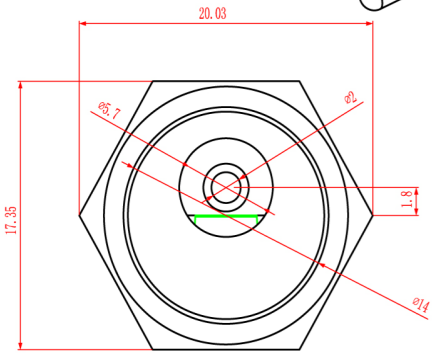

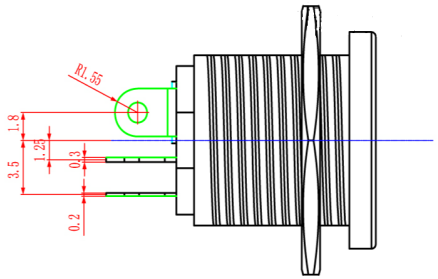

Technical Specifications

1.Rated Electrical Load: DC30V 0.5A

2.Contact Resistance: less than 30 milliohm

3.Insulation Resistance: greater than or equal to 100 megohm

4.Withstand Voltage: AC500V(50Hz)/min

5.Insertion-withdrawal Force: 3~20N

	DESCRIPTION	MATERIAL	COLOR	REMARK
7	Hexagon Thin Nut	Customer's Selection	Cuelectroplated Tin	————
6	1#Terminal	Iron Sheet	Cuelectroplated Tin	QSn6.5-0.1锡青铜带 t=0.30mm GB2066-89
5	Rear Panel	PCB	Yellow	
4	2#Terminal	Iron Sheet	Cuelectroplated Tin	QSn6.5-0.1锡青铜带 t=0.30mm GB2066-89
3	3#Terminal	Manganese Steel	Cuelectroplated Tin	QSn6.5-0.1锡青铜带 t=0.30mm GB2066-89
2	Base	PA66	Black	————
1	Contact Pin	Round bar material	Cuelectroplated Tin	————

ECN(DCN) NO.	REV	DATE	DESCRIPTION	CHANGE	APPRO.	GENERAL TOLERANCE UNLESS OTHERWISE NOTED
	PA	08/01/28				

DRAW	
DESIGN	
CHECH	
CHECK	
APPRO.	

CUSTOMER COPY | 名稱 TITLE: Electrical Socket

SHENZHEN KINGHELM ELECTRONIC CO., LTD.

WWW.BDS666.COM

KH-DC-022-2.5

0755-83044319

圖號 DRAWING NO. | A 狀態碼

SCALE 5:1 | UNIT mm | A4