Rev.	ECN Number	Description	Date	Drawn	Checkd	Approved

Kinghelm®

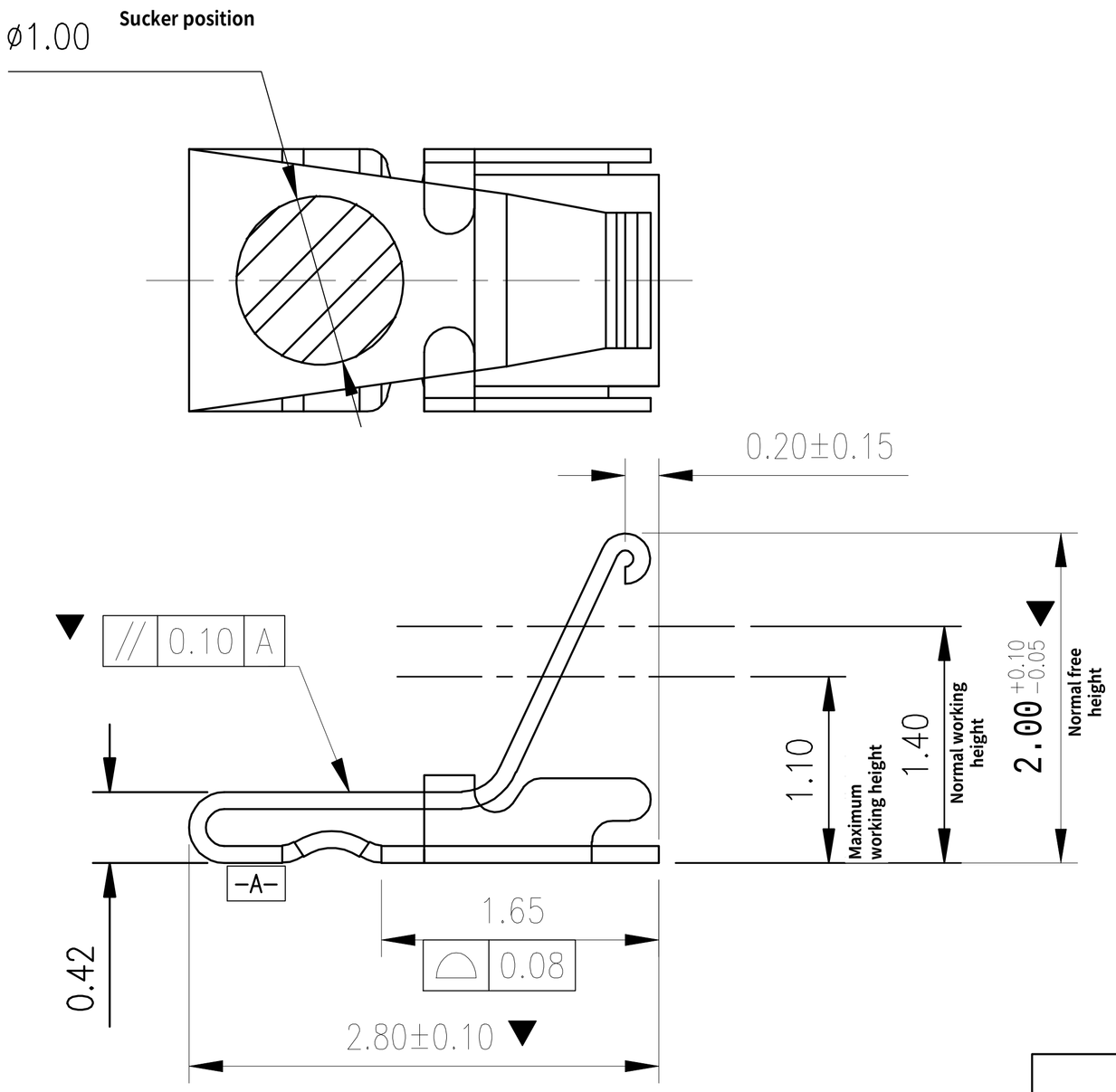

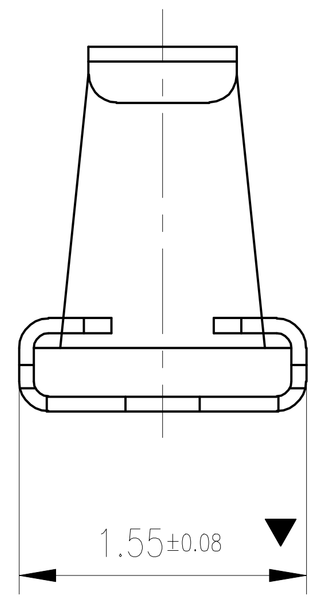

Specification

1. Material: stainless steel SUS301, t = 0.10 ± 0.005;
▼2. The welding and contact surfaces of the Tin terminal shall be free of burrs, and the maximum size of burrs in other parts shall be 0.03mm;
3. Twisting: 45 ° / 1000mm, arch 5mm/1000nim;
4. Dimensions marked with "▼" shall be measured and inspected with emphasis;
5. Unmarked R Max R0 13;
6. Electroplating must be inspected by 48-hour salt spray test;
7. Life test > 20000 times The elasticity of the product shall be between 60gf and 80gf as required.
8. Ni 50~80u"min, soldering area gold-plating, contact area gold plating1U"MIN

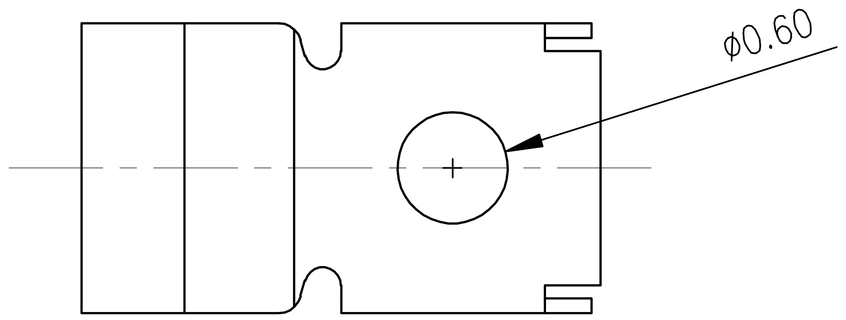

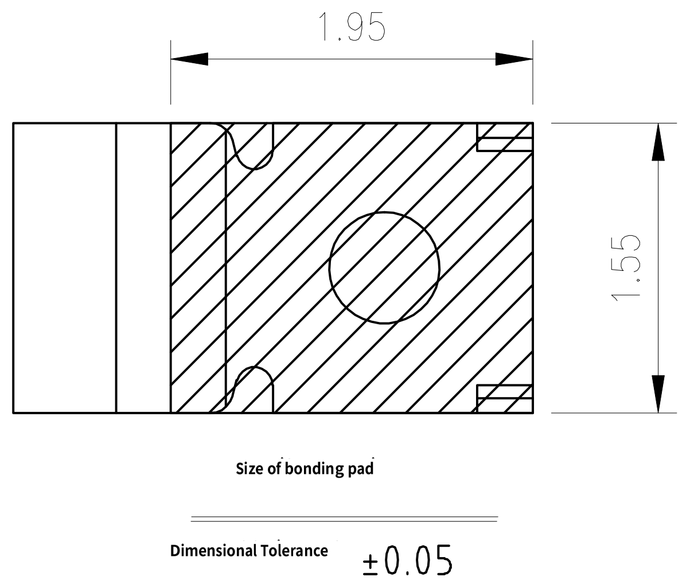

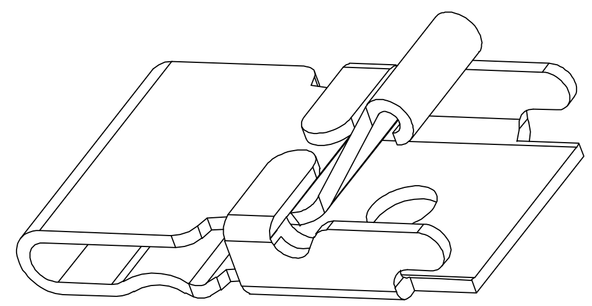

SHENZHEN KINGHELM ELECTRONIC CO., LTD.	GENERALTOLERANCE		SCALE: 1:1	DRAWN	DATE	DWG. NO. 681−0025C−2	TITLE Customer's drawing	REV. A
WWW.BDS666.COM	XX. ±0.50		UNIT: mm	CHECK	DATE	PARTS NO.(INTENDED USE) JXH0025C2	RF Antenna Sprinc,SMT, L2.8*W1.55*H 2.0 mm	SHEET 1/1
Model : KH-2815520-TP	X. ±0.35	X.° ±2.0°						
0755-83044319	.X ±0.25	.X° ±1.0°	SIZE: A4	APPROVE	DATE			
	.XX ±0.15	.XX° ±0.5°						