Kinghelm®

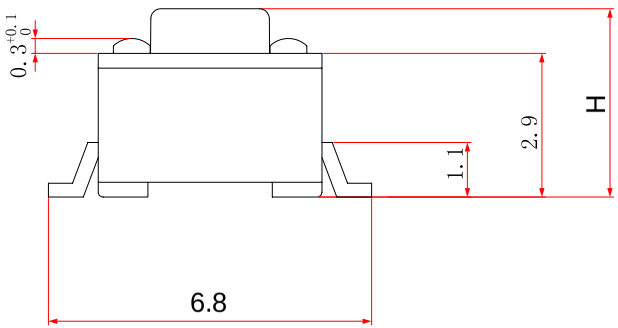

Size range	Unspecified Tolerance
0～3	±0.1
3～6	±0.15
6～9	±0.2
9～12	±0.25
12～15	±0.3

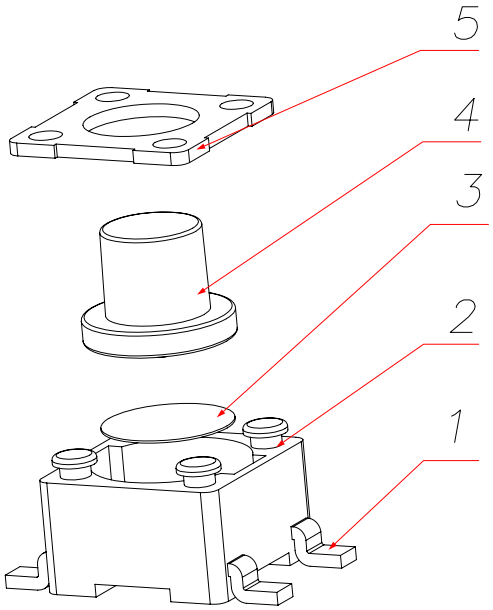

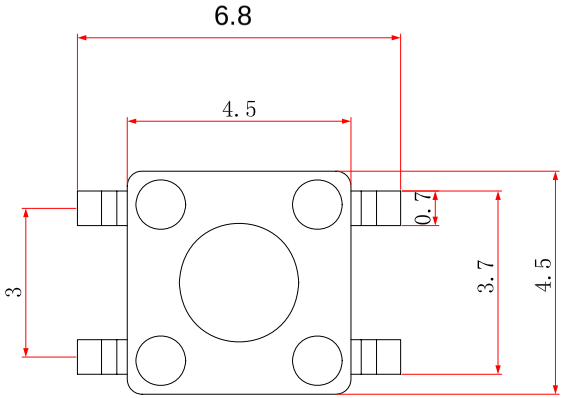

Note: the SMT pins provided by the company are in two different lengths, one of which is 6 5±0. 1. The other is 7.1 ± 0.1 mm 1. Please pay attention to the distincti

	DESCRIPTION	MATERIAL	COLOR	REMARK
5	Cover plate	Iron	Silver-plating	
4	Nuts	PPA	Black	
3	Reed	Silver coating	——	
2	Base	PPA	Black	
1	Inserts	Brass	Silver-plating	

			SHENZHEN KINGHELM ELECTRONIC CO., LTD.	WWW.BDS666.COM	DESIGN	
			KH-4.5X4.5X4.3H-STM	0755-83044319	CHECH	
	PA	08/01/09			CHECK	
ECN(DCN) NO.	REV	DATE	DESCRIPTION	CHANGE / APPRO. / GENERAL TOLERANCE UNLESS OTHERWISE NOTED	APPRO.	

CUSTOMER COPY	TITLE: 4.5 SMT-layout			
TYPE NO.	TSTP45H			
MATERIAL				
DRAWING NO.	A Status Code	ARAM3.608.025WX		
SCALE	5:1	UNIT	mm	A4