Kinghelm®

Size range	Unspecified Tolerance
0~3	±0.1
3~6	±0.15
6~9	±0.2
9~12	±0.25
12~15	±0.3

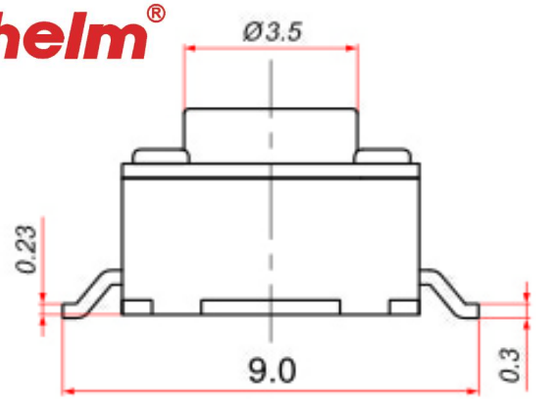

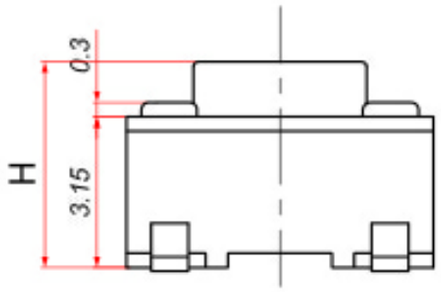

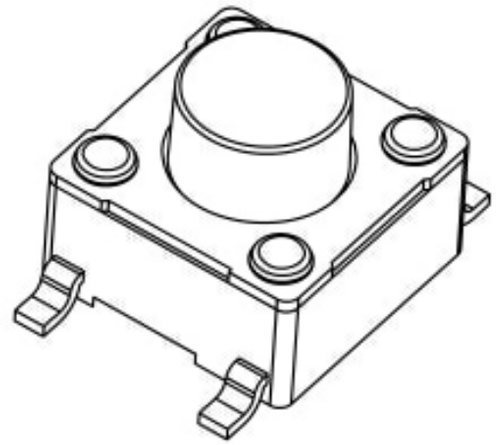

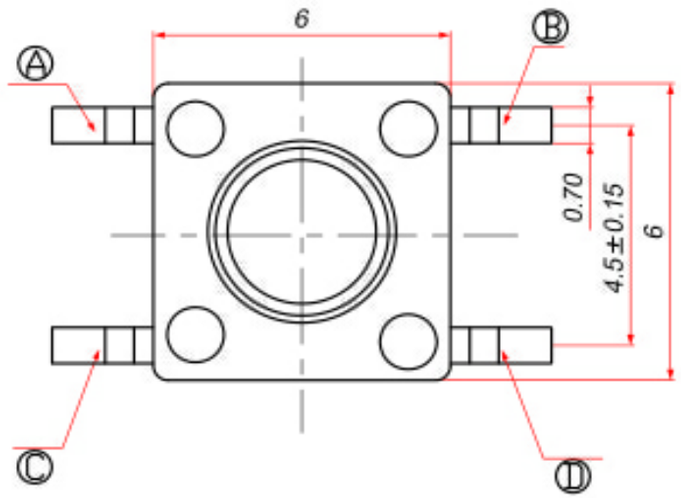

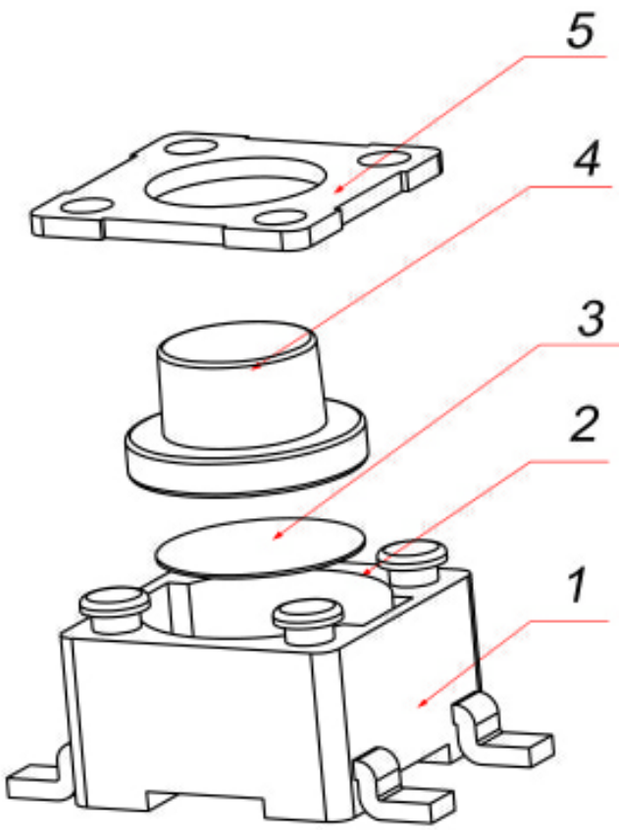

1.Rating:DC12V 50mA.
2.Travel:0.3±0.1mm.
3.Operating Force:250/180±30gf
4.Contact Resistance:50mΩMax.
5.Life:80,000 Cycles Min.

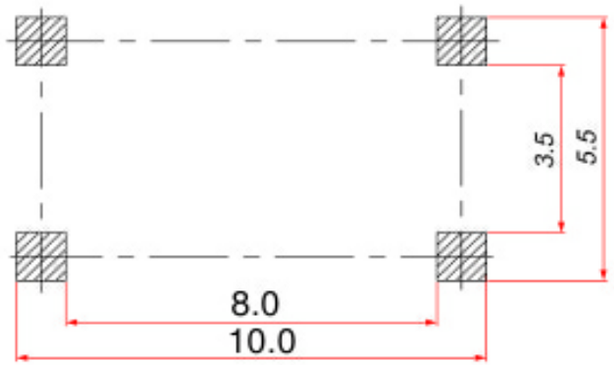

Recommended P.C.B layout

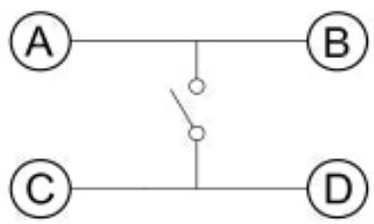

SCHEMATIC

NO.	DESCRIPTION	MATERIAL	COLOR	REMARK
5	Cover plate	Iron	——	Cu-electroplated Tin
4	Button	PPA	Black/White	
3	Flexible Piece	Silver coating	——	Imported
2	Base	PPA	Black	
1	Inserts	Brass	——	Silver-plating

	PA	07/12/29					
ECN(DCN) NO.	REV	DATE	DESCRIPTION	CHANGE	APPRO.	GENERAL TOLERANCE UNLESS OTHERWISE NOTED	

DRAW			
DESIGN			
CHECH			
APPRO.			

SHENZHEN KINGHELM ELECTRONIC CO., LTD.	WWW.BDS666.COM
KH-6X6X8H-STM	0755-83044319
CUSTOMER COPY	TITLE: 6*6 SMD TACT SWITCH
TYPE NO.	RS6647WA-LF
PART NO.(OLD)	
DRAWING NO.	A Status Code
SCALE 5:1	UNIT mm A4