RevNo	Revision note	Date	Signature	Checked

Kinghelm®

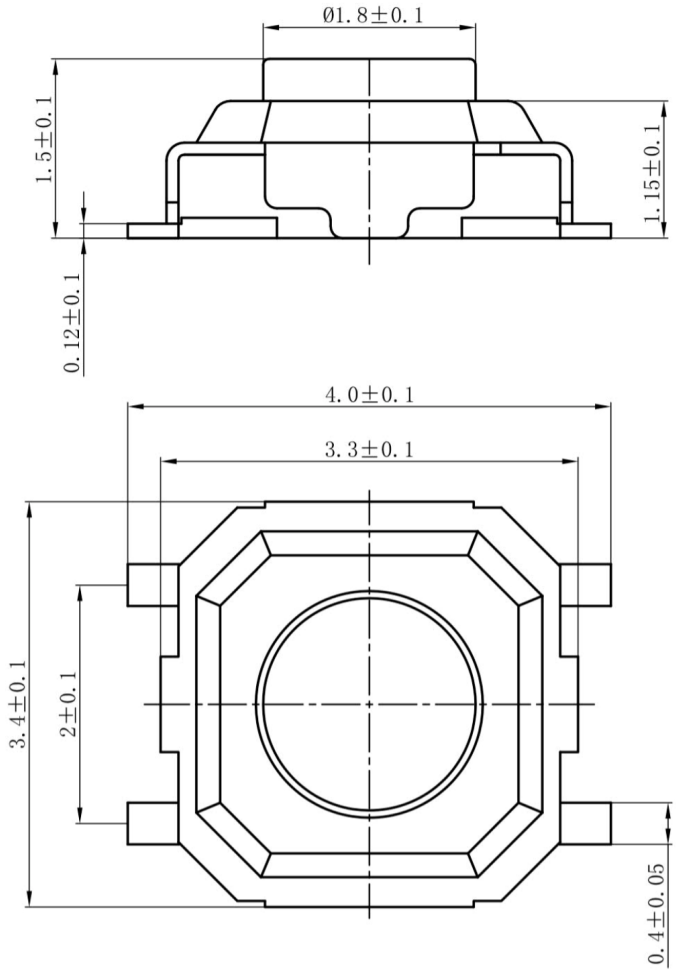

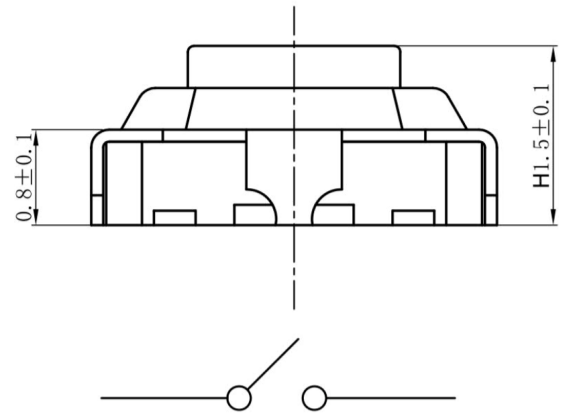

Schematic diagram

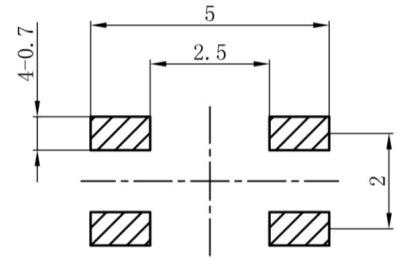

Reference drawing for installation

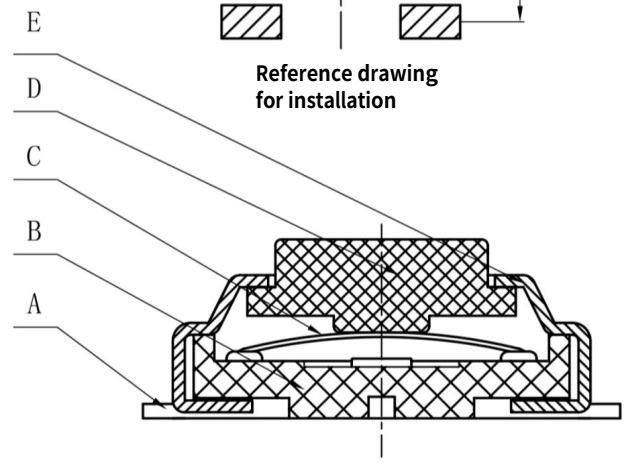

Specification

1. The surface of plastic parts shall be smooth and free from scratches, splashes, deformation affecting appearance and performance
2. Rated current: 50mA 12V DC, insulation resistance 100m Ω min, 100V DC, dielectric strength 250V AC for 1min, contact resistance 100m Ω max. Operating temperature: - 30 ° to + 85 °, service life： 80000 times, operating force: 250gf ± 50gf.
3. The switch feels good, the gear is clear and reliable, and there is no jamming. After eliminating the external force, it shall be able to return to reset

NO.	Name	Part name	Materials	Quantity	Remark
F	Dustproof film	FS017	0.05	1	
E	Cover plate	NE-05	Stainless steel	1	Silver-plating
D	Button	ND-04	LCP Black	1	
C	Reed	NC-03	Imported stainless-steel composite silver	2	
B	Base	NB-02	LCP Black	1	
A	Clamping pieces	NA-01	Phosphor Bronze	1	Silver-plating

Marking	Number of Revised	Revised Document Number	Signature	Date

Materials		Angle Tolerance: ±1°	Scale: 15:1
Electro plating color		Standard tolerance: ±0.01	Unit: mm
Thickness		Date	REV: A

Designed	Standardization	Checked	Approval

NAME: 3X3X1.5H Tact Switch

SHENZHEN KINGHELM ELECTRONIC CO.,

WWW.BDS666.COM

KH-303015-AJ

0755-83044319