Kinghelm®

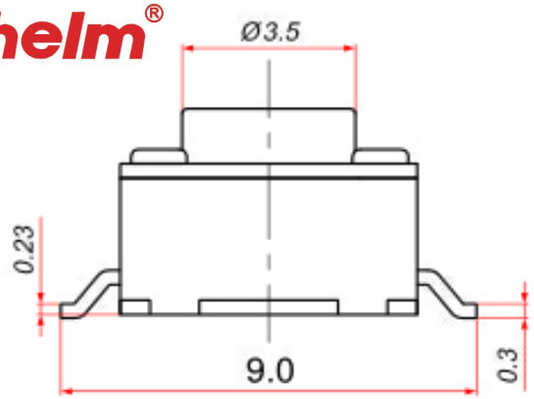


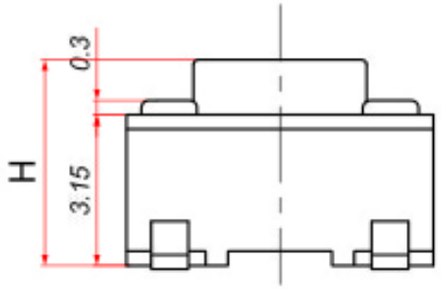


| Size range | Unspecified Tolerance |
|---|---|
| 0~3 | ±0.1 |
| 3~6 | ±0.15 |
| 6~9 | ±0.2 |
| 9~12 | ±0.25 |
| 12~15 | ±0.3 |

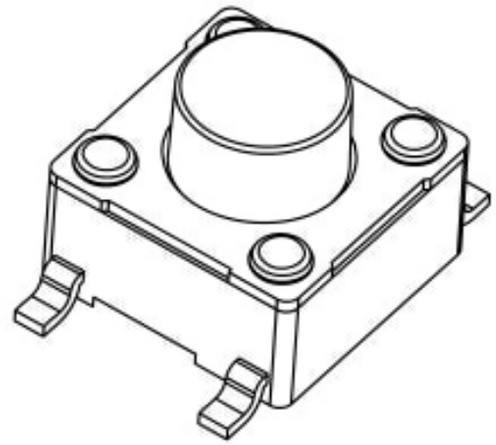

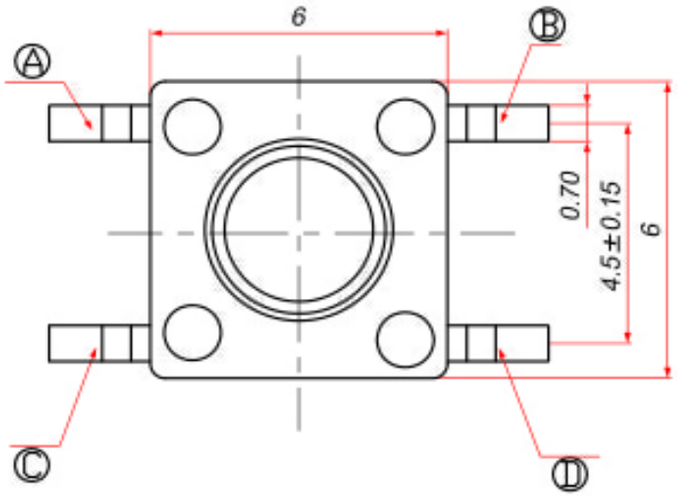


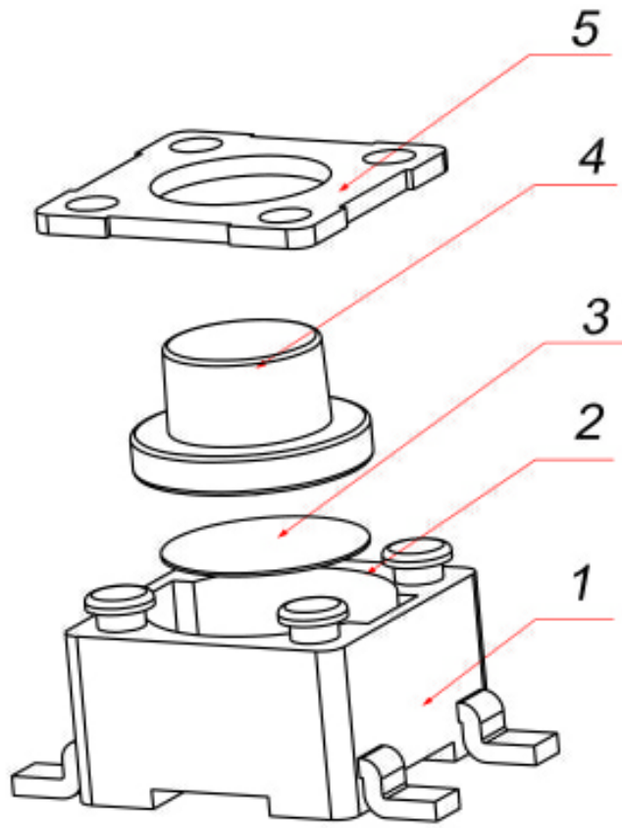


1.Rating:DC12V 50mA.
2.Travel:0.3±0.1mm.
3.Operating Force:250/180±30gf
4.Contact Resistance:50mΩMax.
5.Life:80,000 Cycles Min.

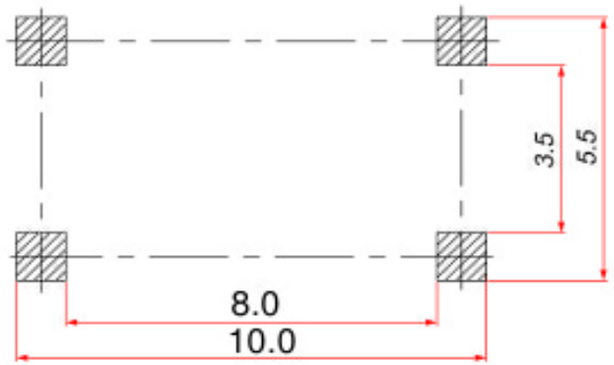


Recommended P.C.B layout

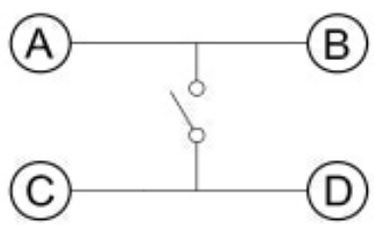


SCHEMATIC

| NO. | DESCRIPTION | MATERIAL | COLOR | REMARK |
|---|---|---|---|---|
| 5 | Cover plate | Iron | —— | Cu-electroplated Tin |
| 4 | Button | PPA | Black/White | |
| 3 | Flexible Piece | Silver coating | —— | Imported |
| 2 | Base | PPA | Black | |
| 1 | Inserts | Brass | —— | Silver-plating |

SHENZHEN KINGHELM ELECTRONIC CO., LTD. WWW.BDS666.COM

KH-6X6X10H-STM 0755-83044319

CUSTOMER COPY TITLE: 6*6 SMD TACT SWITCH

| ECN(DCN) NO. | REV | DATE | DESCRIPTION | CHANGE | APPRO. |
|---|---|---|---|---|---|
| | PA | 07/12/29 | | | |

GENERAL TOLERANCE UNLESS OTHERWISE NOTED

DRAW
DESIGN
CHECH
APPRO.

TYPE NO. RS6647WA-LF

PART NO.(OLD)

DRAWING NO. A Status Code

SCALE 5:1 UNIT mm A4