Kinghelm®

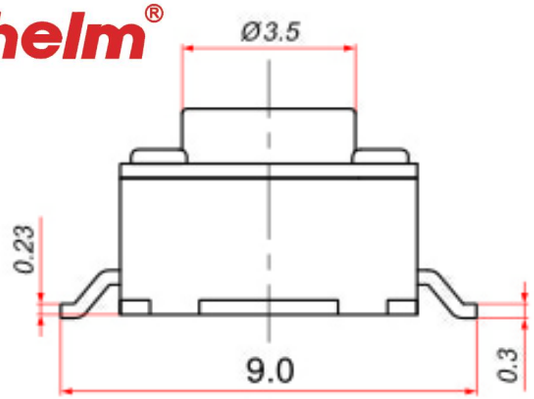

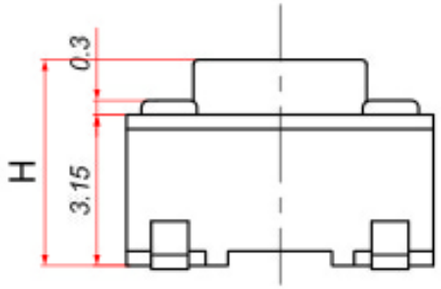

Size range	Unspecified Tolerance
0~3	±0.1
3~6	±0.15
6~9	±0.2
9~12	±0.25
12~15	±0.3

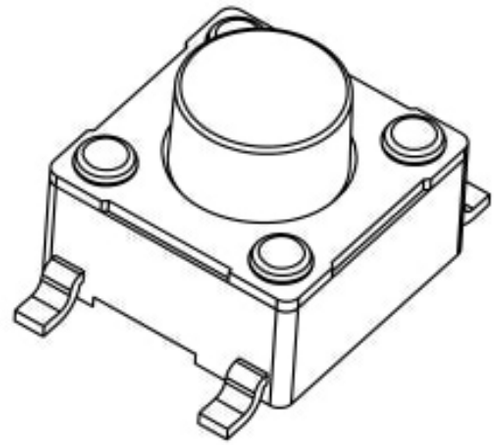

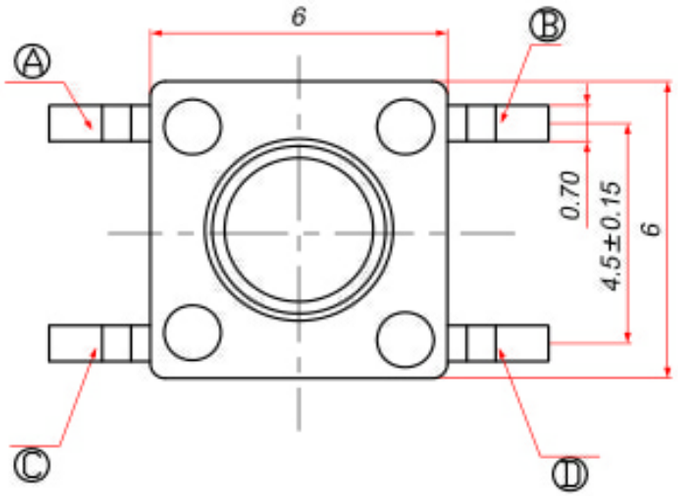

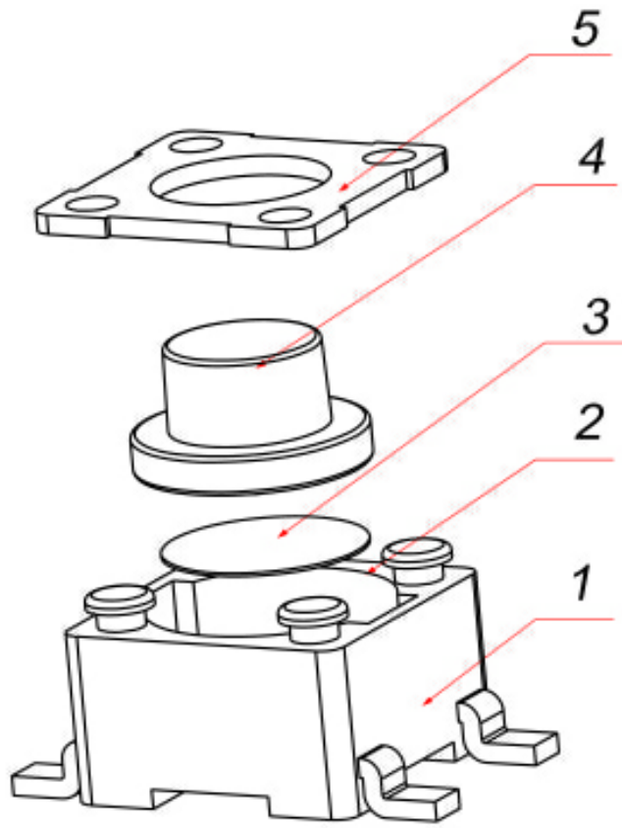

1.Rating:DC12V 50mA.
2.Travel:0.3±0.1mm.
3.Operating Force:250/180±30gf
4.Contact Resistance:50mΩMax.
5.Life:80,000 Cycles Min.

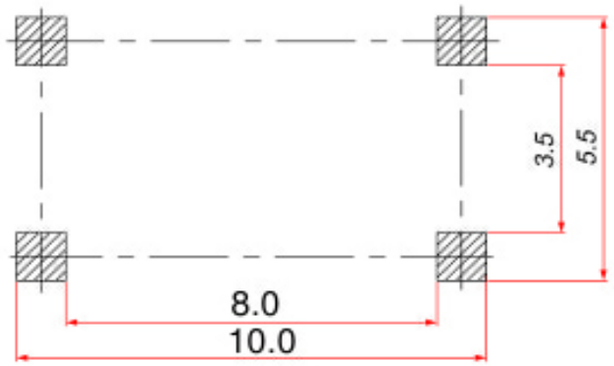

Recommended P.C.B layout

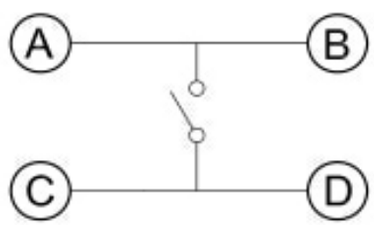

SCHEMATIC

NO.	DESCRIPTION	MATERIAL	COLOR	REMARK
5	Cover plate	Iron	——	Cu-electroplated Tin
4	Button	PPA	Black/White	
3	Flexible Piece	Silver coating	——	Imported
2	Base	PPA	Black	
1	Inserts	Brass	——	Silver-plating

SHENZHEN KINGHELM ELECTRONIC CO., LTD. WWW.BDS666.COM

KH-6X6X9H-STM 0755-83044319

CUSTOMER COPY TITLE: 6*6 SMD TACT SWITCH

ECN(DCN) NO.	REV	DATE	DESCRIPTION	CHANGE	APPRO.
	PA	07/12/29			

GENERAL TOLERANCE UNLESS OTHERWISE NOTED

DRAW			
DESIGN			
CHECH			
APPRO.			

TYPE NO. RS6647WA-LF

PART NO.(OLD)

DRAWING NO. A Status Code

SCALE 5:1 UNIT mm A4