RevNo	Revision note	Date	Signature	Checked

Kinghelm®

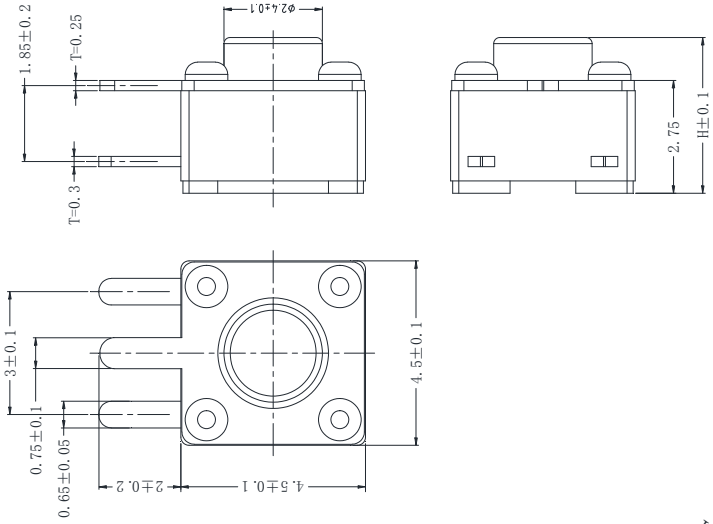

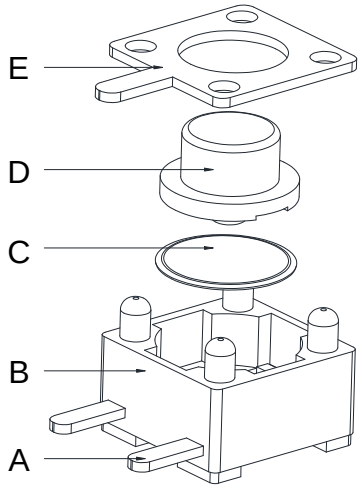

Technical Specifications

1. Rated Current: 50mA 12V DC
2. Contact Resistance: 100mΩ
3. Actuation Force: 160±30gf/260±50gf
4. Travel: 0.15±0.05mm
5. Insulation Resistance: 10MΩ
6. Dielectric Strength: 100V 50Hz 1Min
7. Lifetime: 50,000 times

Electrical Schematic Diagram

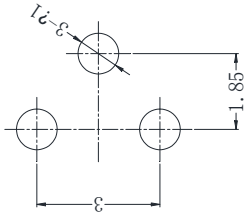

PCB Diagram

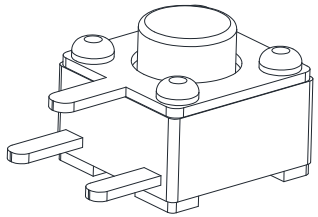

No.	Component	Material	Qty.	Note
E	Cover	0.25 Iron Sheet	1	Tin-plated Copper
D	Plunger	Black PPA	1	Cleaning
C	Contact Dome	Stainless Steel Silver Plating	1	
B	Base	Black PPA	1	Cleaning
A	Contact	0.3 Brass	1	Silver-plated

Mark	Count	Changed file No.	Sig.	Date

First-person Perspective

General Tolerance	
>0.5-2	±0.1
>2-5	±0.2
>5	±0.3
Angle	±1°

Designed	Checked	Approved

Scale	Part No.	4.5*4.5 Edge Tripod
1:1		
Unit	Product Name	4.5*4.5 Edge Tripod (2.0)
mm		

Shenzhen Kinghelm Electronics Co., Ltd	www.kinghelm.net
KH-BM2.54B-4P	0755-28190160